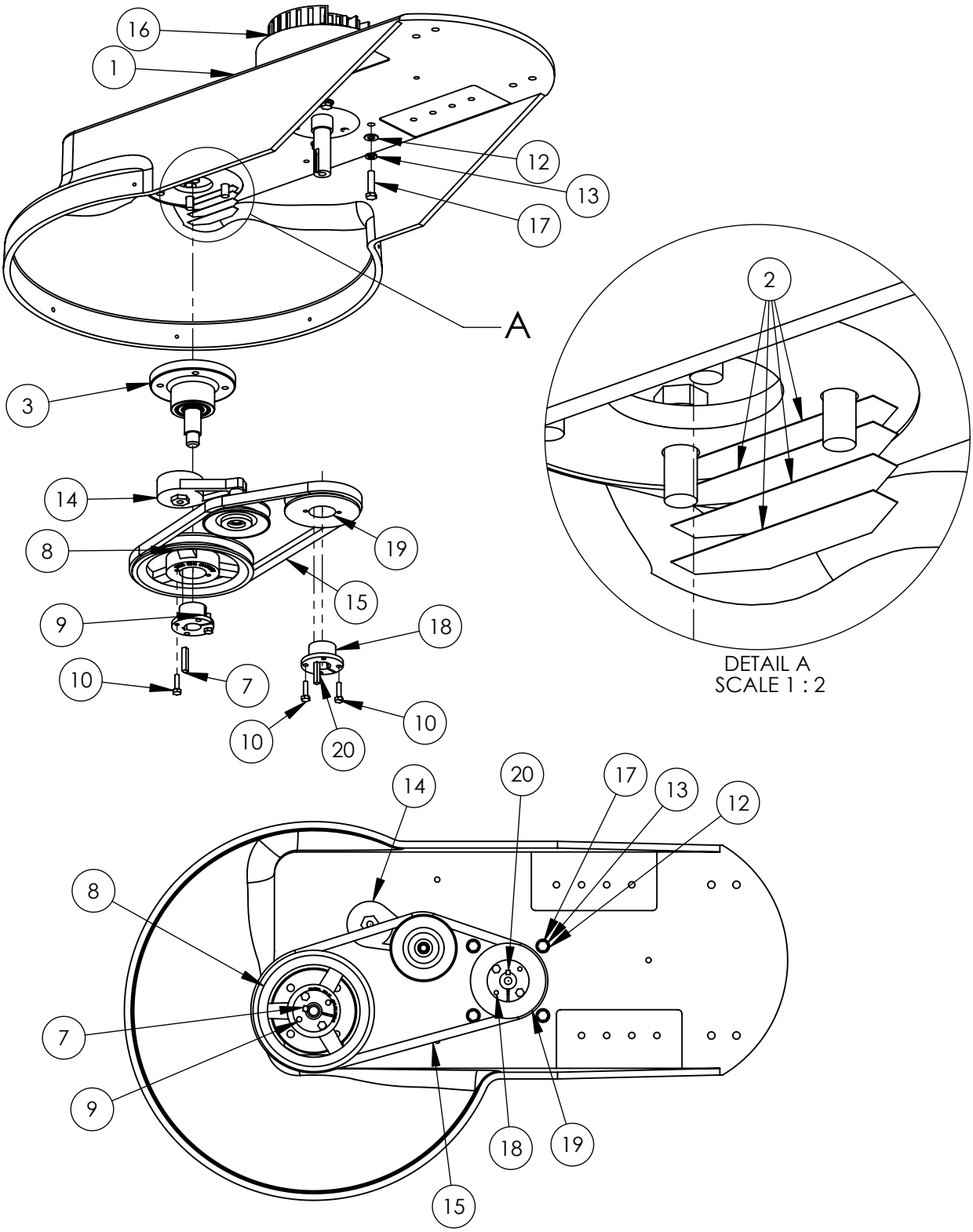XT3-21 MOTOR, PULLEYS, AND BELT